eneo IND-58F0002MTPB

Articlenumber: 246665

Short description

Network Dome Camera Fix, Turret, Panorama 180°, 2x 5120x1440, Day/Night, WDR, AI, 2x 2,8mm, IR, White Light, 12VDC, PoE, IP67



Key features

- Multisensor 2x 1/2.7' CMOS sensor, panorama
- Maximum resolution 5120x1440 pixels each, 15fps
- Panorama ultra wide-angle camera 180° HFoV, 32:9
- AI analysis functions including object classification
- WDR, BLC, HLC and 3D-DNR noise reduction
- Lenses with 2.8mm fixed focal length
- Smart Codec H.265/H.264, dual streaming
- Browser-independent (Edge, Safari, Firefox, Chrome)
- Supports ONVIF profiles S/T/G/M and audio
- Local storage via micro SD card
- NDAA compliance
- Integrated IR and white light LED illumination, IP67

© Copyright VIDEOR E. Hartig GmbH - November 2026 - Subject to technical changes

Features

Product Labels	
EAN/GTIN	4260229841884
Manufacturer number	246665
Series	eneo IN-Serie
Camera	
Camera shape	Minsters
Chip size	1/2,7"
Resolution standard	8 MP
Photosensitivity	0.001 Lux bei (F1.6, AGC ON)
Recording sensor	CMOS, Chipset NT98529, SC533HAI
System	True Day&Night
Low Speed Shutter	Yes
Manual Electric Shutter (MES)	1-5~1-20,000sec.
Flickerless function	Yes
Backlight compensation	Yes
Day/night switching	Switchable IR Filter (ICR)
Day/night mode	Day, Night, Automatic, Time
White balance	Automatic, Manual
Signal-to-noise ratio	49 dB
Video	
Resolution (extended)	5120x1440, 4608x1296, 4096x1152, 3840x1080, 3072x864, 1536x432, 1024x288
Picture size	180° panorama
Video Compression	H.265, H.264, H.265+, H.264+, MJPEG
Data stream types	Dual Streaming
Image transfer rate max.	15 fps
Lens	
Lens Type	Prime lens
Focal length	2,8 mm
MOD (Minimum Object Distance)	2 m
Aperture Range (F)	F1,2
Vertical angle of view	60°

© Copyright VIDEOR E. Hartig GmbH - November 2026 - Subject to technical changes

Continuation Features

Horizontal angle of view	180°
Iris Control	DC
Display / Presentation	
Image resolution max.	5120x1440
DORI	
Perceiving (25px/m)	60,1m
Watch (62px/m)	23,8m
Detect (125px/m)	11,7m
Identify (250px/m)	5,5m
Features	
Multicast	Yes
Motion detector	Yes
Analysis	Face, Object Classification Human / Vehicle (PD&VD), Line crossing (LCD), Object classification, People counting, Heat Map (HM), Crowds (CD), Queues (QD), License plate recognition (LPR), Intrusion, Leave Region, Enter Region, Rare Sounds (RSD)
Alarm processing	Recording internal storage (SD card), E-Mail, HTTP, FTP, TCP, UDP, Red & blue flashing lights, Cloud Upload
Audio support	Yes
Audio	Built-in microphone, Built-in speaker, 2 Way Audio
Password	Administrator and User
Internal memory	microSD card slot
Menu languages	English, German, French, Italian, Portuguese, Spanish, Turkish, Japanese
Browser	MS Internet Explorer 10/11, Safari, Firefox, Google Chrome, Edge
Digital Noise Reduction (DNR)	Yes
Privacy Zone	Areas-ON/OFF switchable
Network	
Security	Password, Complicated password, HTTPS encryption, IP address filtering, IEEE 802.1X-Authentication (available from firmware version 8.2.4.1)
Network Protocols	IPv4, IPv6, HTTP, HTTPS, FTP, SMTP, UPnP, DNA, DDNS, DHCP, NTP, RTSP, RTP, TCP-IP, UTP, PPPoE
Interfaces / Inputs / Outputs	
External connections	RJ-45, 12VDC input (DC plug), connection cable approx.30cm, micro SD card slot 256 GB
Ethernet interface	10Base-T, 100Base-TX

© Copyright VIDEOR E. Hartig GmbH - November 2026 - Subject to technical changes

Continuation Features

Control Interfaces	Ethernet
General	
Wide Dynamic Range (WDR)	WDR 120dB
Lighting	Infrared, Warm Light
Audio compression	G.711a, G.711u
Dimensions (WxHxD) (extended)	112,4x135 mm
Weight	0.765 kg
Illumination range	Approx. 30 m | Approx. 15 m Warm light
Color (Housing)	RAL9003, Other colors available upon request
Housing type	Outside
Housing material	Aluminium
Camera Type	Panoramic camera
Power consumption	13.5 W
Mounting type	Ceiling, Wall
ONVIF	ONVIF Profile G, ONVIF Profile M, ONVIF Profile S, ONVIF Profile T
Power over Ethernet	IEEE 802.3af
ESC	1/5 ~ 1/20.000sec.
Protection	IP67, NEMA 4X
SDK	Upon request
Power supply	12VDC, Poe
Temperature Range (Operating)	-30°C ~ +60°C, @ Luftfeuchtigkeit 90% oder weniger (nicht kondensierend)
Text overlay	Switchable on/off
Scope of Delivery	
Scope of delivery	Quick installation guide, drilling template, 3x wall plugs with screws, 1x Allen wrench, 1x waterproof cover for RJ45 connector
Notes	
Remark	Face and license plate recognition require an SD card or an eneo IN recorder. For optimal results, use only eneo components. For mixed brands, we offer a compatibility check for a fee (info: item #229235 at VIDEOR).

Optional Accessories

Art. Nr	Name	Product description

© Copyright VIDEOR E. Hartig GmbH - November 2026 - Subject to technical changes

Continuation Optional Accessories

218218	eneo Site Manager	Management Software for eneo IP products
236198	eneo INsight Installation Tool	Supports adjustments for cameras with AI features for IN-series
234989	eneo INsight	Control software for recorder IN- and MN-series
234990	eneo INsight mobile	Mobile App for recorder IN- and MN-series
233754	eneo AK-20	Camera connection box for Wall and ceiling mounting, IN Series Bullet Cameras
233775	eneo AK-21	Camera connection box for Wall and ceiling mounting, Bullet and Dome Cameras IN series
235339	eneo AK-24	Dual camera connection box for selected Bullet or Fix Dome IN-Series cameras
236663	eneo DOME-WB8	Wall bracket for PTZ dome INP-54M2812M0A and IND-5 Dome Series

Optional Recommendations

Art. Nr	Name	Product description
242363	eneo NSUR-1008M0A	Gigabit Switch Rack, Unmanaged, 8x PoE, 2xSFP, max. 30W each Port, integrated Power Supply max. 150W
242364	eneo NSUR-1016M0A	Gigabit Switch Rack, Unmanaged, 16x PoE, 2xSFP, max. 30W each Port, integrated Power Supply max. 250W
242365	eneo NSUR-1024M0A	Gigabit Switch Rack, Unmanaged, 24x PoE, 2xSFP, max. 30W each Port, integrated Power Supply max. 400W
242366	eneo NSMR-2008M0A	Gigabit Switch Rack, Managed, 8x PoE, 2xSFP, max. 30W each Port, internal Power Supply max. 150W
242367	eneo NSMR-2016M0A	Gigabit Switch Rack, Managed, 16x PoE, 2xSFP, max. 30W each Port, integrated Power Suppply max. 250W
242368	eneo NSMR-2024M0A	Gigabit Switch Rack, Managed, 24x PoE, 2xSFP, max. 30W each Port, integrated Power Supply max. 400W
242369	eneo NSUI-3004M0A	Gigabit Switch Industrial, Unmanaged, 4x PoE, 1xRJ45, 1xSFP, 30W each Port, -40°C~75°C, 44~57 VDC, w/o power supply
242370	eneo NSUI-3008M0A	Gigabit Switch Industrial, Unmanaged, 8x PoE, 2xSFP, 30W each Port, -40°C~75°C, 44~57 VDC, w/o power supply
242371	eneo NSMI-4004M0A	Gigabit Switch Industrial, Managed, 4x PoE, 2xSFP, 30W each Port, -40°C~75°C, 44~57 VDC, w/o power supply
242372	eneo NSMI-4008M0A	Gigabit Switch Industrial, Managed, 8x PoE, 2xSFP, 30W each Port, -40°C~75°C, 44~57 VDC, w/o power supply
219598	jetrics jetcat6SFTP-GN-0,5/1	
219599	jetrics jetcat6SFTP-GN-1/1	
219600	jetrics jetcat6SFTP-GN-2/1	

© Copyright VIDEOR E. Hartig GmbH - November 2026 - Subject to technical changes

Continuation Optional Recommendations

219601	jetrics jetcat6SFTP-GN-3/1	
219602	jetrics jetcat6SFTP-GN-7,5/1	
230068	jetrics jetpower-PSU-XS-11C Steckernetzteil	

Optional Services

Art. Nr	Name	Product description
211125	VIDEOR PAINTING SERVICE fix dome camera	in RAL color
214441	VIDEOR PAINTING SERVICE basic costs	once per RAL color and delivery lot
229234	VIDEOR CON-KAM-IPKON	Preconfiguration 1x IP camera Function test, FW update

Technical Drawing

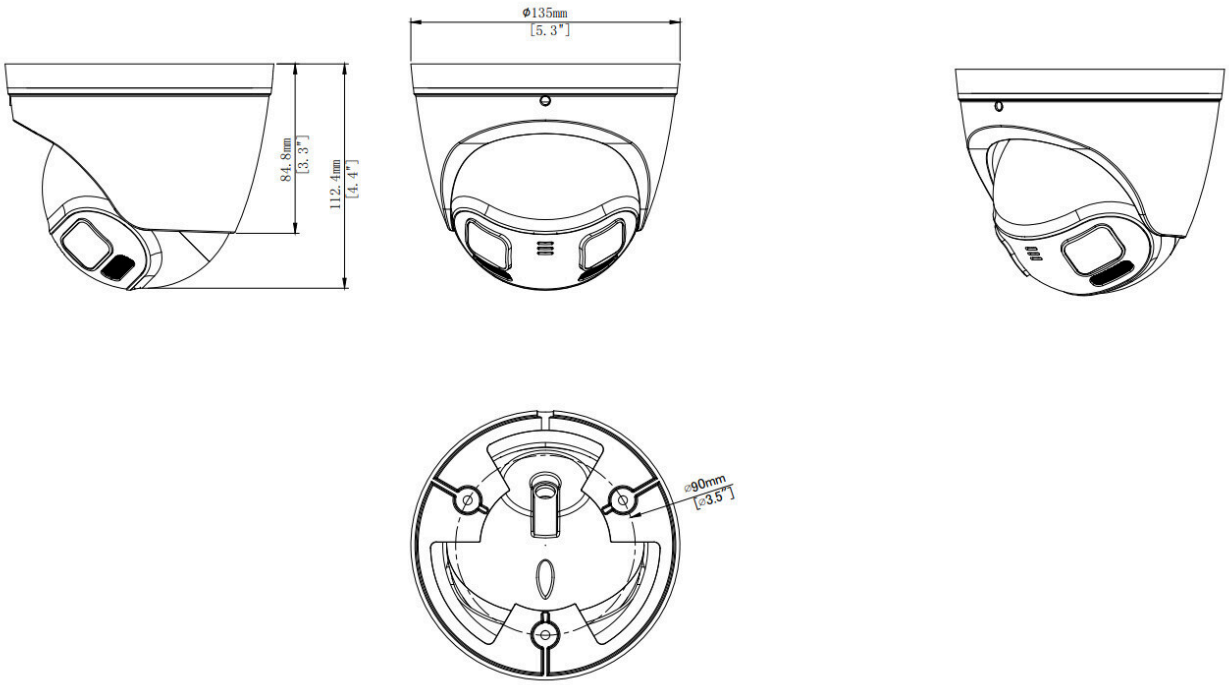

© Copyright VIDEOR E. Hartig GmbH - November 2026 - Subject to technical changes

eneo is a registered trademark of
VIDEOR E. Hartig GmbH
Carl-Zeiss-Straße 8
63322 Rödermark, Deutschland

Phone: +49 6074 - 888 - 300
Fax: +49 6074 - 888 - 100
E-Mail: info@eneo-security.com
Web: www.eneo-security.com

© Copyright VIDEOR E. Hartig GmbH - November 2026 - Subject to technical changes