eneo IND-42M2808M0A

Articlenumber: 246625

Short description

Mini Network Dome Camera Fix, 1920x1080, Day/Night, WDR, AI 2,8-8mm, IR, 12VDC, PoE, IP66, IK10



Key features

- 1/2.8" Sony STARVIS CMOS sensor,2 MP/60fps
- AI analysis functions including object classification
- WDR 120dB, 3D-DNR Noise Reduction
- Motorized varifocal lens 2.8-8mm
- Smart Codec H.265/H.264, multi-streaming
- Browser independent (IE, Edge, Safari, Firefox, Chrome)
- Supports ONVIF profiles S/T/G/M
- Multilingual menu navigation (OSD)
- Local storage via Micro SD card
- Supports audio and external alarm input and output
- NDAA compliance
- IR LED illumination, IP66 and vandal proof IK10

© Copyright VIDEOR E. Hartig GmbH - November 2026 - Subject to technical changes

Features

Product Labels	
EAN/GTIN	4260229841846
Manufacturer number	246625
Series	eneo IN-Serie
Camera	
Camera shape	Minsters
Chip size	1/2,9"
Resolution standard	2 MP
Photosensitivity	Color 0,0034lux bei F1.6(AGC ON)
Recording sensor	CMOS, SSC30KQ, SC235HAI
System	True Day&Night
Low Speed Shutter	Yes
Manual Electric Shutter (MES)	1-5~1-20,000sec.
Flickerless function	Yes
Backlight compensation	Yes
Day/night switching	Switchable IR Filter (ICR)
Day/night mode	Automatic, Day, Night, Image, Time
White balance	Automatic, Manual
Signal-to-noise ratio	41 dB
Video	
Resolution (extended)	1920x1080 (16:9), 1280x960 (4:3), 1280x720 (16:9), 640x480 (4:3), 320x240 (4:3)
Picture size	16:9, 4:3
Video Compression	H.265, H.264, H.265+, H.264+, MJPEG
Data stream types	Triple-Stream(Main/Sub/Mobile)
Image transfer rate max.	60 fps
Lens	
Lens Type	Varifocal (motorized)
Focal length	2,8 - 8 mm
MOD (Minimum Object Distance)	0.8 m
Aperture Range (F)	F1.8
Vertical angle of view	56° - 25°

© Copyright VIDEOR E. Hartig GmbH - November 2026 - Subject to technical changes

Continuation Features

Horizontal angle of view	100° - 44°
Iris Control	DC
Zoomfactor (optical)	3
Display / Presentation	
Image resolution max.	1920x1080
DORI	
Perceiving (25px/m)	37,3 - 96,9m
Watch (62px/m)	13,9 - 38,7m
Detect (125px/m)	5,5 - 18,7m
Identify (250px/m)	2,7 - 8,6m
Features	
Multicast	Yes
Motion detector	Yes
Analysis	Face Recognition (FR), Object Classification Human / Vehicle (PD&VD), Line crossing (LCD), Passage count (CC), Heat Map (HM), Crowds (CD), Queues (QD), License plate recognition (LPR), Rare Sounds (RSD), Intrusion, Leave Region, Enter Region
Alarm processing	Recording internal storage (SD card), E-Mail, HTTP, FTP, TCP, UDP, alarm out, Cloud Upload
Turning range	350 °
Vertical tilt range	0~ +80°
Audio support	Yes
Audio	2 Way Audio
Password	Administrator and User
Internal memory	microSD card slot
Menu languages	English, German, French, Italian, Portuguese, Spanish, Turkish, Japanese
Browser	MS Internet Explorer 10/11, Safari, Firefox, Google Chrome, Edge
Digital Noise Reduction (DNR)	Yes
Privacy Zone	Areas-ON/OFF switchable
Network	
Security	IP address filtering, Password, Complicated password, IEEE 802.1X-Authentication (available from firmware version 8.2.4.1)
Network Protocols	TCP-IP, HTTP, DHCP, DDNS, DNA, RTP, RTSP, SMTP, NTP, UPnP, HTTPS, FTP

© Copyright VIDEOR E. Hartig GmbH - November 2026 - Subject to technical changes

Continuation Features

Interfaces / Inputs / Outputs	
External connections	RJ-45, Alarm in/output, Audio input/output, 12VDC input (DC plug), connection cable approx.45cm, micro SD card slot 512 GB
Ethernet interface	10Base-T, 100Base-TX
Alarm inputs	1
Control Interfaces	Ethernet
General	
Wide Dynamic Range (WDR)	120dB
Lighting	Infrared
Audio compression	G.711
Dimensions (WxHxD) (extended)	115x91,6mm
Weight	0.56 kg
Illumination range	Approx. 20m
Color (Housing)	RAL9003, Other colors available upon request
Color (dome)	clear
Housing type	Outside
Housing material	Aluminium
Camera Type	Domecamera
Power consumption	6.2 W
Mounting type	Ceiling, Wall
ONVIF	ONVIF Profile G, ONVIF Profile M, ONVIF Profile S, ONVIF Profile T
Power over Ethernet	IEEE 802.3af
ESC	1/5 ~ 1/20.000sec.
Protection	IP67
SDK	Upon request
Power supply	12VDC, Poe
Temperature Range (Operating)	-35°C ~ +60°C, @ Luftfeuchtigkeit 90% oder weniger (nicht kondensierend)
Text overlay	Switchable on/off
Vandalism-resistant	Yes
Certifications	IK10
Scope of Delivery	
Scope of delivery	Quick installation guide, drilling template, 4 wall plugs with screws, 1 Torx wrench, waterproof cover for RJ45 connector

© Copyright VIDEOR E. Hartig GmbH - November 2026 - Subject to technical changes

Continuation Features

Notes	
Remark	Face and license plate recognition require an SD card or an eneo IN recorder. For optimal results, use only eneo components. For mixed brands, we offer a compatibility check for a fee (info: item #229235 at VIDEOR).

Optional Accessories

Art. Nr	Name	Product description
218218	eneo Site Manager	Management Software for eneo IP products
234990	eneo INsight mobile	Mobile App for recorder IN- and MN-series
236198	eneo INsight Installation Tool	Supports adjustments for cameras with AI features for IN-series
234989	eneo INsight	Control software for recorder IN- and MN-series
234753	eneo AK-22	Camera junction box for wall and ceiling mount, Mini Dome IND-42M2808M0A
234754	eneo AK-23	Camera connection box for Mini Dome IND-42M2808M0A for holder Dome-WB6/Dome-CH6
234757	eneo DOME-WB7	Wall bracket for Mini Dome IND-42M2808M0A

Optional Recommendations

Art. Nr	Name	Product description
242363	eneo NSUR-1008M0A	Gigabit Switch Rack, Unmanaged, 8x PoE, 2xSFP, max. 30W each Port, integrated Power Supply max. 150W
242364	eneo NSUR-1016M0A	Gigabit Switch Rack, Unmanaged, 16x PoE, 2xSFP, max. 30W each Port, integrated Power Supply max. 250W
242365	eneo NSUR-1024M0A	Gigabit Switch Rack, Unmanaged, 24x PoE, 2xSFP, max. 30W each Port, integrated Power Supply max. 400W
242366	eneo NSMR-2008M0A	Gigabit Switch Rack, Managed, 8x PoE, 2xSFP, max. 30W each Port, internal Power Supply max. 150W
242367	eneo NSMR-2016M0A	Gigabit Switch Rack, Managed, 16x PoE, 2xSFP, max. 30W each Port, integrated Power Suppply max. 250W
242368	eneo NSMR-2024M0A	Gigabit Switch Rack, Managed, 24x PoE, 2xSFP, max. 30W each Port, integrated Power Supply max. 400W
242369	eneo NSUI-3004M0A	Gigabit Switch Industrial, Unmanaged, 4x PoE, 1xRJ45, 1xSFP, 30W each Port, -40°C~75°C, 44~57 VDC, w/o power supply
242370	eneo NSUI-3008M0A	Gigabit Switch Industrial, Unmanaged, 8x PoE, 2xSFP, 30W each Port, -40°C~75°C, 44~57 VDC, w/o power supply

© Copyright VIDEOR E. Hartig GmbH - November 2026 - Subject to technical changes

Continuation Optional Recommendations

242371	eneo NSMI-4004M0A	Gigabit Switch Industrial, Managed, 4x PoE, 2xSFP, 30W each Port, -40°C~75°C, 44~57 VDC, w/o power supply
242372	eneo NSMI-4008M0A	Gigabit Switch Industrial, Managed, 8x PoE, 2xSFP, 30W each Port, -40°C~75°C, 44~57 VDC, w/o power supply
219598	jetrics jetcat6SFTP-GN-0,5/1	
219599	jetrics jetcat6SFTP-GN-1/1	
219600	jetrics jetcat6SFTP-GN-2/1	
219601	jetrics jetcat6SFTP-GN-3/1	
219602	jetrics jetcat6SFTP-GN-7,5/1	
230068	jetrics jetpower-PSU-XS-11C Steckernetzteil	

Optional Services

Art. Nr	Name	Product description
229234	VIDEOR CON-KAM-IPKON	Preconfiguration 1x IP camera Function test, FW update
214441	VIDEOR PAINTING SERVICE basic costs	once per RAL color and delivery lot
211125	VIDEOR PAINTING SERVICE fix dome camera	in RAL color

© Copyright VIDEOR E. Hartig GmbH - November 2026 - Subject to technical changes

Technical Drawing

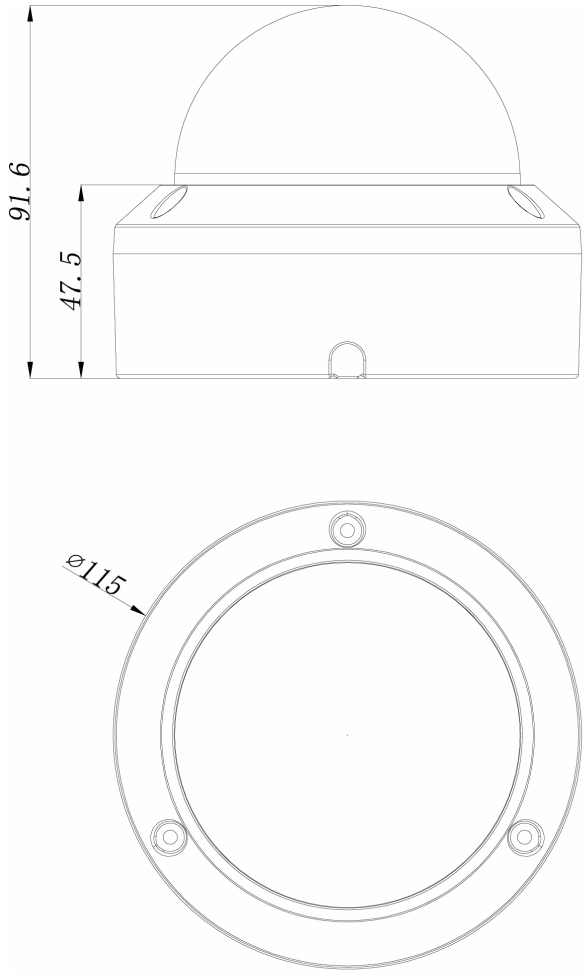

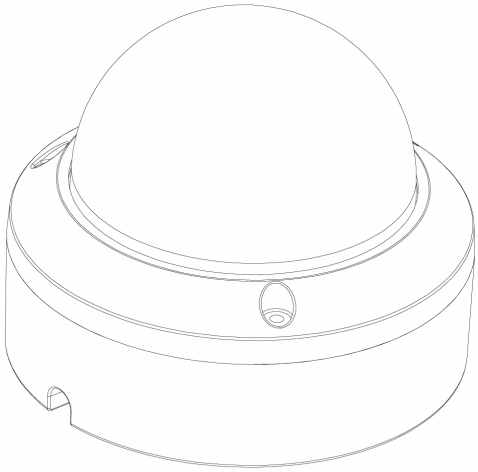

Maße / Dimensions: mm

eneo is a registered trademark of
VIDEOR E. Hartig GmbH
Carl-Zeiss-Straße 8
63322 Rödermark, Deutschland

Phone: +49 6074 - 888 - 300
Fax: +49 6074 - 888 - 100
E-Mail: info@eneo-security.com
Web: www.eneo-security.com

© Copyright VIDEOR E. Hartig GmbH - November 2026 - Subject to technical changes