eneo INM-78M2812M0A

Articlenumber: 236668

Short description

Network Multisensor Camera, 360°, 4x 3840x2160, Day&Night, WDR, AI, 4x 2,8-12mm, IR, White light, IP67, IK10



Key features

- Multidirectional camera 4x 1/1.8" CMOS sensor
- Max. Resolution 32MP, 4x 3840 x 2160, frame rate 30fps
- 4 Lenses with motorised focal length 2.8-12mm
- AI analysis functions including object classification
- Smart codec H.265/H.264, multi-streaming
- Browser-independent (Edge, Safari, Firefox, Chrome)
- Supports T-WDR, BLC, HLC and 3D DNR
- Supports ONVIF profiles S/T/G/M
- Integrated IR and white light illumination
- For outdoor use IP67, vandalism protected IK10
- NDAA compliance
- Wall bracket and PoE injector included

© Copyright VIDEOR E. Hartig GmbH - November 2026 - Subject to technical changes

Features

Product Labels	
EAN/GTIN	4260229840627
Manufacturer number	236668
Series	eneo IN-Serie
Camera	
Camera shape	Minsters
Chip size	1/1,8"
Resolution standard	32 MP
Photosensitivity	0,006 Lux bei F1,2
Recording sensor	CMOS
System	Electronic Day&Night
Low Speed Shutter	Yes
Manual Electric Shutter (MES)	1-5~1-20,000sec.
Backlight compensation	Yes
Day/night switching	Switchable IR Filter (ICR)
Day/night mode	Day, Night, Automatic, Time
White balance	Automatic
Signal-to-noise ratio	51 dB
Video	
Resolution (extended)	3840x2140 (16:9), 2592x1944 (4:3), 2592x1520 (16:9), 2304x1296 (16:9), 1920x1080 (16:9), 1280x960 (4:3), 1280x720 (16:9), 640x480 (4:3), 320x240 (4:3)
Video Compression	H.264, H.265, H.264+, H.265+, M-JPEG
Data stream types	Triple-Stream(Main/Sub/Mobile)
Image transfer rate max.	25 fps
Lens	
Lens Type	Varifocal (motorized)
Focal length	2,8 - 12 mm
Aperture Range (F)	F1.3
Vertical angle of view	27° - 58°
Horizontal angle of view	360°
Iris Control	DC

© Copyright VIDEOR E. Hartig GmbH - November 2026 - Subject to technical changes

Continuation Features

Display / Presentation	
Image resolution max.	4x 3840x2160
DORI	
Perceiving (25px/m)	58,6 - 177 m
Watch (62px/m)	23,4 - 71 m
Detect (125px/m)	11,4 - 35,1 m
Identify (250px/m)	5,4 - 17,6 m
Features	
Multicast	Yes
Motion detector	Yes
Analysis	Face Capture (FD), Intrusion (PID), Line crossing (LCD), Abandoned and Removed Objects (SOD), Passage count (CC), Crowds (CD), Queues (QD), Heat Map (HM), License plate recognition (LPR), Image rotation for cameras mounted at a 90° angle, Attendance (FA), Face Attributes (AD), Face Recognition (FR), Leave Region, License plate recognition (LPD), Object Classification Human / Vehicle (PD&VD), Rare Sounds (RSD)
Alarm processing	recording internal storage (SD card), E-Mail, HTTP, FTP, TCP, UDP, alarm out, Cloud Upload
Audio support	Yes
Audio	2 Way Audio
Password	Administrator and User
Internal memory	microSD card, microSDHC card, microSDXC card, 256GB
Menu languages	English, German, French, Italian, Portuguese, Spanish, Turkish, Russian, Japanese
Browser	MS Internet Explorer 10/11, Google Chrome, Firefox, Safari
Digital Noise Reduction (DNR)	Yes
Privacy Zone	Areas-ON/OFF switchable
Network	
Security	IEEE 802.1X-Authentication (available from firmware version 8.2.4.1), IP address filtering, Password, Complicated password
Network Protocols	TCP-IP, HTTP, DHCP, DNA, DDNS, RTP, RTSP, NTP, UPnP, SMTP, HTTPS, FTP, PPPoE, IEE 802.1
Interfaces / Inputs / Outputs	
External connections	RJ-45, 12VDC input, 24VAC input, Alarm in/output, Audio input/output, micro SD card slot 256 GB
Ethernet interface	10Base-T, 100Base-T
Alarm inputs	0

© Copyright VIDEOR E. Hartig GmbH - November 2026 - Subject to technical changes

Continuation Features

Control Interfaces	Ethernet
General	
Wide Dynamic Range (WDR)	WDR 120dB
Lighting	Infrared, White
Dimensions (WxHxD) (extended)	300x195mm
Weight	4.6 kg
Illumination range	Approx. 35 m IR | Approx. 25 m White light
Color (Housing)	RAL9003, Pantone P 179-1 / Other colors available upon request
Color (dome)	clear
Housing type	Outside
Housing material	Aluminium
Camera Type	Multi-sensor camera
Power consumption	43 W
Mounting type	Wall
ONVIF	ONVIF Profile S, ONVIF Profile G, ONVIF Profile T, ONVIF Profile M
Power over Ethernet	IEEE 802.3bt
ESC	1/5 ~ 1/20.000sec.
Protection	IP67, NEMA 4X
SDK	upon request
Power supply	24VAC, 12VDC, PoE++
Temperature Range (Operating)	-30°C ~ +55°C, @ Luftfeuchtigkeit 95% oder weniger (nicht kondensierend)
Text overlay	Switchable on/off
Vandalism-resistant	Yes
Certifications	IK10
Scope of Delivery	
Scope of delivery	manual, bag of screws, wall bracket, PoE-Injector 100-240VAC~ 56VDC, 60W
Notes	
Remark	For optimal results, use only eneo components. For mixed brands, we offer a compatibility check for a fee (info: item #229235 at VIDEOR).

© Copyright VIDEOR E. Hartig GmbH - November 2026 - Subject to technical changes

Further information

Application Scenarios for the eneo INM-78M2812M0A Multisensor 360° Camera

The eneo INM-78M2812M0A combines four 4K sensors, advanced video analytics and a rugged outdoor housing to deliver powerful 360° surveillance. It replaces multiple single-sensor cameras, eliminates blind spots and lowers installation and operating costs – the ideal choice for professional video security where image quality, reliable detection and compliance really matter.

Typical use cases:

City and municipal surveillance Monitoring squares, intersections, pedestrian zones or parks with just one camera. The total 32 MP resolution and WDR provide highly detailed images – even in backlight situations and challenging lighting conditions.

Parking lots, garages and outdoor areas Complete overview of large parking areas, entrances/exits and loading zones. Integrated IR and white light illumination ensure clear images at night, while AI analytics support accurate detection of people and vehicles.

Logistics, warehousing and industrial sites Surveillance of loading bays, production areas and warehouses. The rugged, vandal-resistant IK10/IP67 design is made for harsh environments, and object classification helps to minimize false alarms.

Shopping centers, retail areas and branch networks Wide-area coverage of entrances, mall areas and checkout zones. Multiple viewing directions can be combined flexibly – for visitor flow analysis, safety and loss prevention within a single system.

Education and healthcare campuses Monitoring of campus grounds, courtyards, access roads and parking areas. 360° coverage supports security concepts at schools, universities and hospitals with just a few strategically placed cameras.

Critical infrastructure and perimeter protection Securing energy facilities, water plants, data centers or government sites. AI-driven analytics help reliably detect and classify security-relevant events around sensitive areas.

Transport hubs and public transit Use at train and bus stations or airport access roads. The wide dynamic range (120 dB WDR) delivers clear images in scenes with strong contrasts, such as entrances from bright outdoor zones into darker halls.

With PoE++, an included wall mount and browser-independent access, the eneo INM-78M2812M0A integrates quickly and easily – into existing VMS platforms via ONVIF as well as into new, modern security architectures.

You can find an installation video at the following link:

Optional Accessories

Art. Nr	Name	Product description
218218	eneo Site Manager	Management Software for eneo IP products
236198	eneo INsight Installation Tool	Supports adjustments for cameras with AI features for IN-series
234989	eneo INsight	Control software for recorder IN- and MN-series
234990	eneo INsight mobile	Mobile App for recorder IN- and MN-series
235257	eneo PM-21	Pole mounting adapter, steel for camera connection box AK-20, AK-21 and wall mount WB-24
235562	eneo CM-22	Corner mounting adapter for wall bracket WB-24 and PTZ dome camera INP-75A0033MIB
238984	eneo DOME-CH7	Ceiling mount IN-Series Length approx. 294mm

© Copyright VIDEOR E. Hartig GmbH - November 2026 - Subject to technical changes

Continuation Optional Accessories

245272	eneo PM-21	Pole mounting adapter V2A stainless steel, for camera connection box AK-20, AK-21 and wall mount WB-24

Optional Recommendations

Art. Nr	Name	Product description
219598	jetrics jetcat6SFTP-GN-0,5/1	
219599	jetrics jetcat6SFTP-GN-1/1	
219600	jetrics jetcat6SFTP-GN-2/1	
219601	jetrics jetcat6SFTP-GN-3/1	
219602	jetrics jetcat6SFTP-GN-7,5/1	

Optional Services

Art. Nr	Name	Product description
211125	VIDEOR PAINTING SERVICE fix dome camera	in RAL color
229234	VIDEOR CON-KAM-IPKON	Preconfiguration 1x IP camera Function test, FW update
214441	VIDEOR PAINTING SERVICE basic costs	once per RAL color and delivery lot

© Copyright VIDEOR E. Hartig GmbH - November 2026 - Subject to technical changes

Technical Drawing

Maße / Dimensions in mm

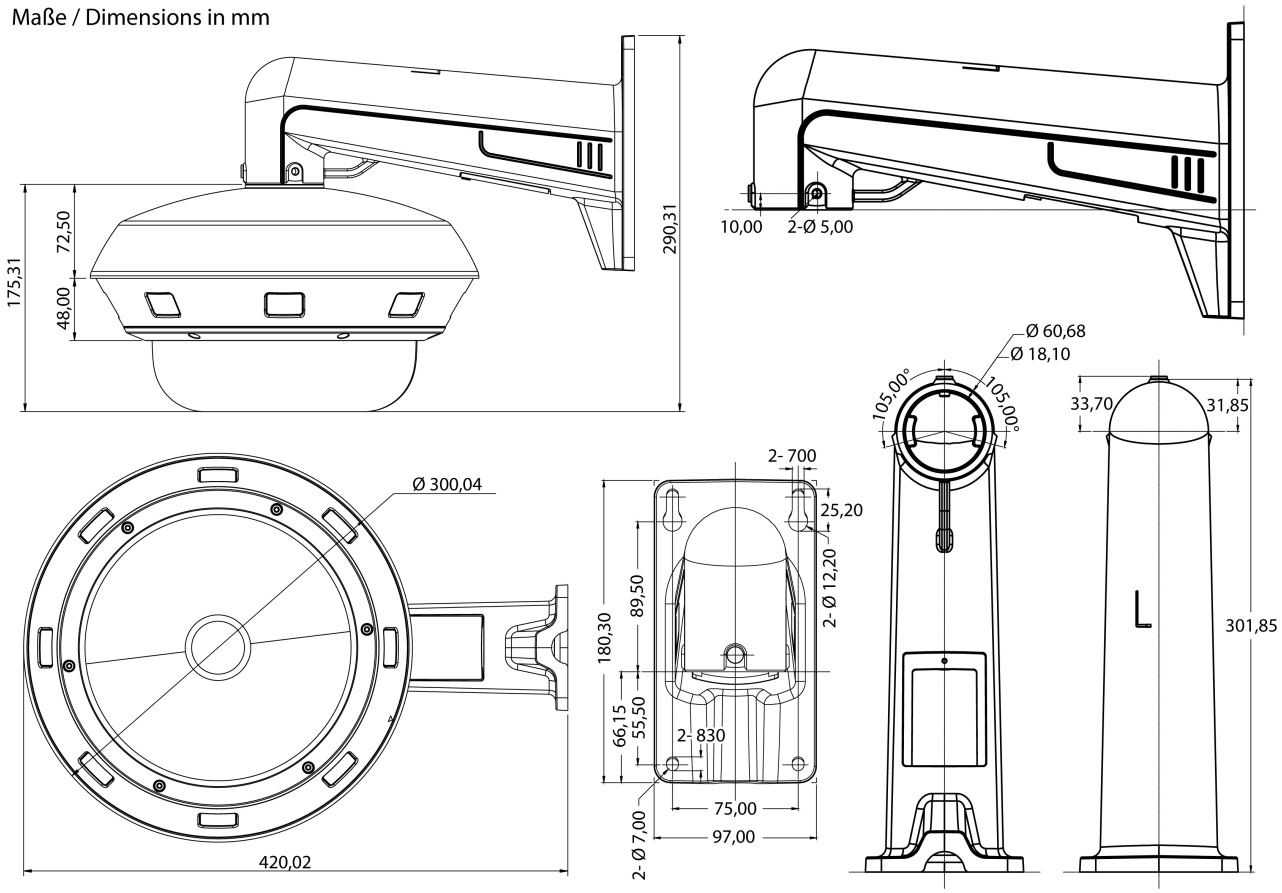

eneo is a registered trademark of
VIDEOR E. Hartig GmbH
Carl-Zeiss-Straße 8
63322 Rödermark, Deutschland

Phone: +49 6074 - 888 - 300
Fax: +49 6074 - 888 - 100
E-Mail: info@eneo-security.com
Web: www.eneo-security.com

© Copyright VIDEOR E. Hartig GmbH - November 2026 - Subject to technical changes