eneo AK-29

Articlenumber: 236664

Short description

Camera connection box for ceiling suspension, for PTZ Dome INP-54M2812M0A



Features

Product Labels	
EAN/GTIN	4260229840481
Manufacturer number	236664
Series	eneo IN-Serie
General	
Dimensions (WxHxD) (extended)	68,6x150mm
Weight	511

© Copyright VIDEOR E. Hartig GmbH - November 2026 - Subject to technical changes

Continuation Features

Color (Housing)	RAL9003, Pantone P 179-1
Scope of Delivery	
Scope of delivery	mounting accessories

Optional Accessories

Art. Nr	Name	Product description
234756	eneo DOME-CH6	Ceiling pipe for junction box AK-23 and AK-25, Length approx. 294mm

Technical Drawing

Maße: Dimensions: mm

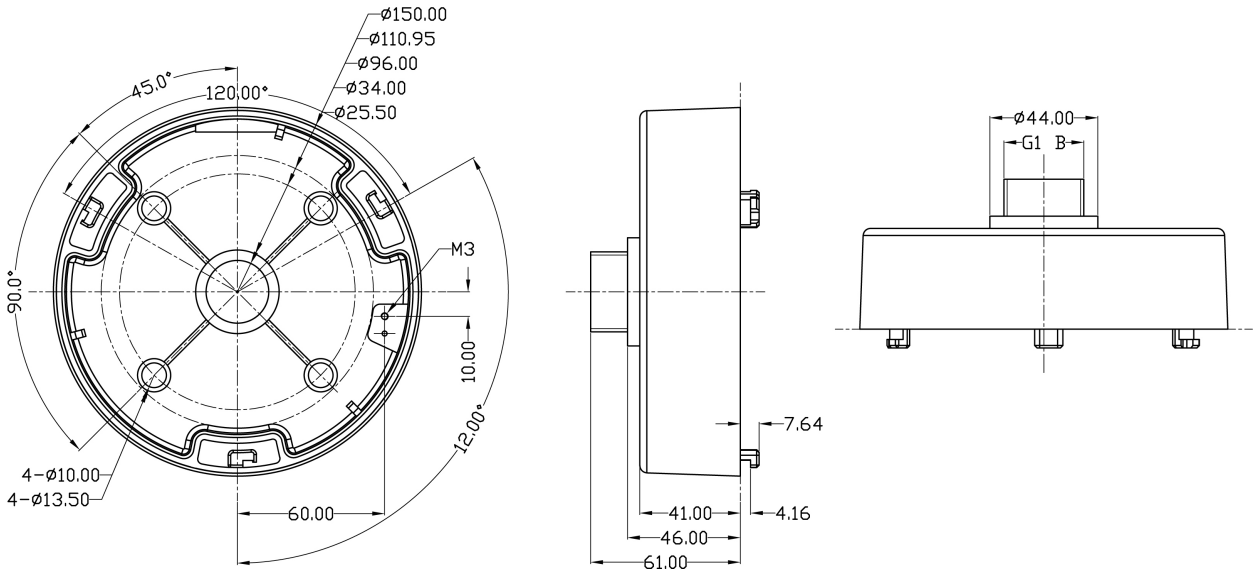

eneo is a registered trademark of
VIDEOR E. Hartig GmbH
Carl-Zeiss-Straße 8
63322 Rödermark, Deutschland

Phone: +49 6074 - 888 - 300
Fax: +49 6074 - 888 - 100
E-Mail: info@eneo-security.com
Web: www.eneo-security.com

© Copyright VIDEOR E. Hartig GmbH - November 2026 - Subject to technical changes